Bambu Lab

Bambu Lab P3C

Tool Changer.
Now Standard.



Swaptek™ — Multi-Material Printing, Made Simple.

Swaptek™

Up to seven materials. Six-second switches.

Each PrintTool has its own filament path. Active Pre-Heat prepares the next nozzle while printing, and a locking mechanism keeps tools securely positioned. No repeated rewinding or re-feeding—material changes take just six seconds.



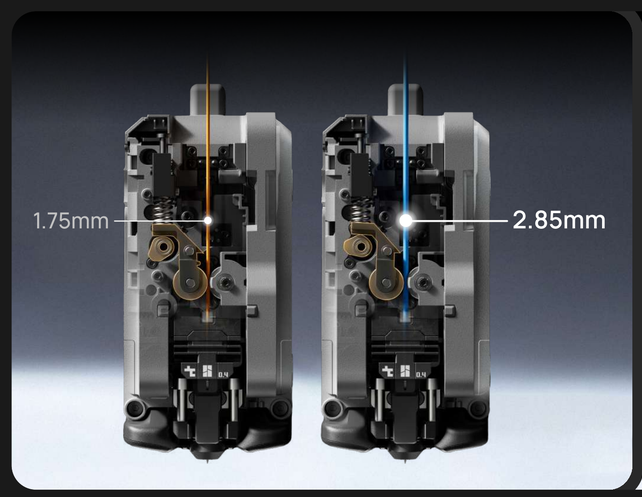

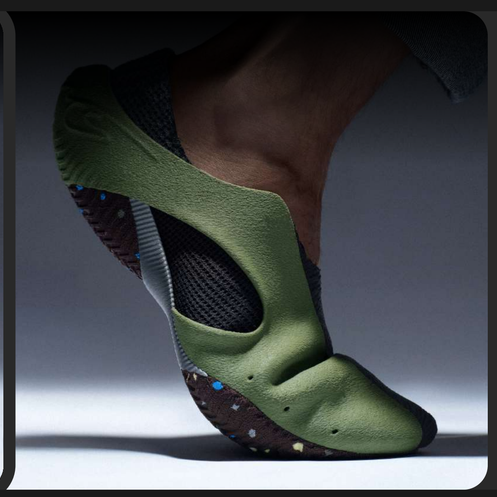

FlexFeed

Softer TPU. Higher flow.

FlexFeed supports both 1.75 mm and 2.85 mm filament. Add the dedicated 2.85 mm TPU PrintTool and matching filament to print TPU as soft as 75A, at up to 3× the flow rate of a traditional setup.*

Mixed Nozzles

Detail and speed, in the same print.

Mix nozzle sizes within a single print: a larger nozzle for the bulk, a finer one for the details. Choose the right size for each material and each part of your design.



More Materials. More Ways to Create.



Humming Bird

CMYKW Color Mixing



Droid 0

Multi-material Posable Figurine



Flexible Footwear

Multi-color Flexibles



Maker Watch

Mixed Nozzle Sizes

AMS 3P — Filament Management Built for Toolchangers.



Fully Enclosed

Seven rolls, neatly inside.

Seven rolls sit in a sealed chamber, with the filament path enclosed inside P3C. No external spool racks or exposed feeding paths—filament stays dry longer, and your workspace stays tidy.

Optional Dryer

Active drying where it matters.

Add the optional Dryer Module to enable 75°C active drying in two AMS 3P slots. Give moisture-sensitive materials such as TPU and PETG convenient drying support, right inside your printer.

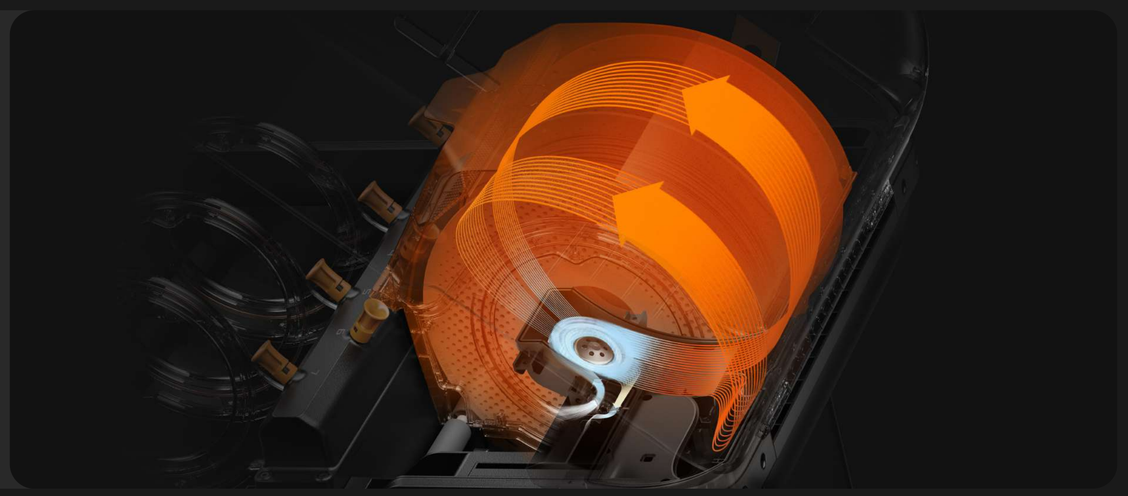

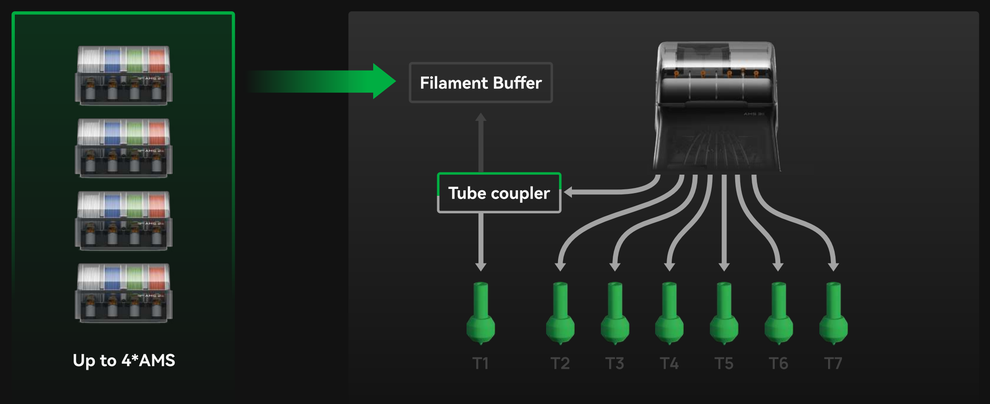

Auxiliary AMS

Beyond seven materials.

Connect compatible external AMS units through PrintTool No. 1 to expand to up to 22 materials in a single print.* More colors and materials, without replacing your P3C.

More Possibilities. Less Manual Work.

Auto Tool Change

Print. Cut. Draw. Deboss.

Swaptek™ goes beyond printing. Add optional CutTool, DrawTool, and DebossTool to switch processes automatically—without changing machines or swapping tools by hand. One machine, more ways to create.



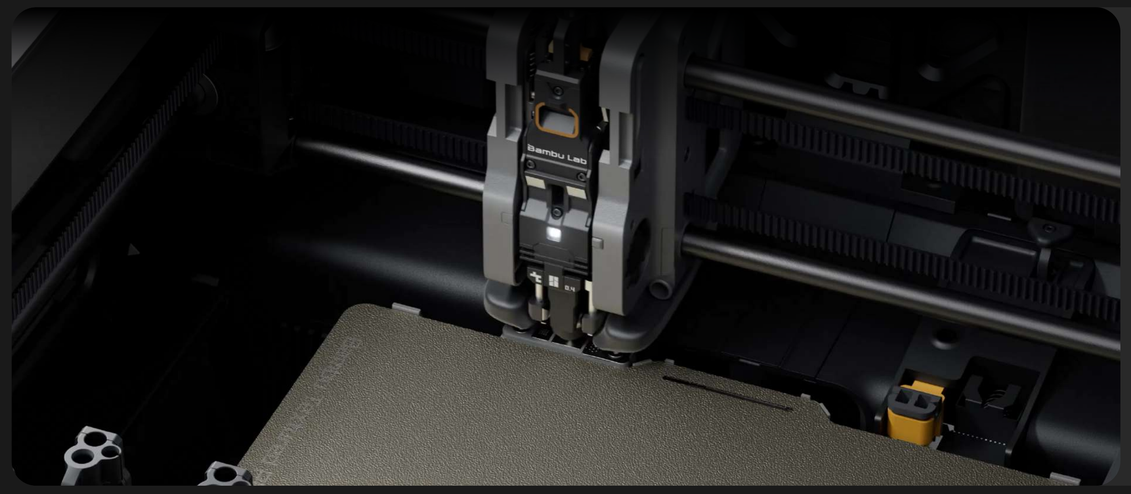

Auto Calibration

Multiple tools, aligned automatically.

P3C automatically calibrates tool docking, nozzle offsets, and bed leveling before printing. Start your job from the client—no need to tune each tool by hand.

HMS + MiniWiki

Find the fix, right on screen.

HMS explains possible fault causes in plain language. MiniWiki guides you through the fix on the printer's screen—no QR codes, no switching to your phone. Read the step. Do the step. Move on.



Official Accessories

Bambu Station

Lift it up. Tidy it up.

Bambu Station raises P3C to a comfortable working height for everyday operation and maintenance. Storage below keeps tools, spare filament, and printing essentials organized and close at hand.





Bambu Lab E1 Air Purifier

Cleaner air, as printing begins.

Bambu Lab E1 starts filtration when P3C begins printing. It helps capture VOCs and odor molecules, along with PM2.5 and ultrafine particles—supporting a cleaner workspace while you create.







P3C Printer Specifications

Printing Technology		Fused Filament Fabrication
Body	Build Volume (L * W * H)	256*256*260 mm
	Hotend Switching System	Bambu Lab SwapTek™ 7-Tool Switching[1]
Dimensions and Weight	Product Dimensions	413*538*540 mm
	Recommended Installation Space	513*960*1212 mm
	Net Weight	26.5 kg (including the AMS 3P)
Toolhead	Included Nozzle Material	Hardened Steel
	Max Nozzle Temperature	300 °C
	Supported Nozzle Diameter	0.2 mm, 0.4 mm, 0.6 mm, 0.8 mm
	Expansion Options	Supports the CraftTool (CutTool, DrawTool, and more coming)
	Supported Filament Diameter	1.75 mm, 2.85 mm (Bypass feed only)
Heatbed	Supported Build Plate Type	Textured PEI Plate, Cool Plate SuperTack, Engineering Plate
	Max Heatbed Temperature	110 °C
Speed	Max Speed of Toolhead	1,400 mm/s
	Max Acceleration of Toolhead	25,000 mm/s²
	Max Flow for Hotend	40 mm³/s (Test parameters: 250 mm round model with a single outer wall; Bambu Lab ABS; 280 °C printing temperature)
Air Purification	HEPA Filter Grade	H11
	Activated Carbon Filter Type	Granulated Coconut Shell
	VOC Filtration	Excellent
	Particulate Matter Filtration	Supported

Filaments Supported	PLA, PETG, PCTG, TPU, EVA, PE, PP, PHA	Supported
	PVA, BVOH, support filament	Supported
	Carbon/glass fiber reinforced: PLA, PETG	Supported
	ABS, ASA, HIPS, PA, PAHT, PC, PET, PPA Carbon/glass fiber reinforced: ABS, ASA, HIPS, PA, PAHT, PC, PET, PPA	Supported
	Filament Drying	Optional
Sensor	Live View Camera	Built-in; 1920*1080
	Filament Run Out Sensor	Supported
	Nozzle Clumping Sensor	Supported
	Filament Odometry[2]	Supported
	Power Loss Recovery	Supported
Electrical Requirements[3]	Voltage	High-voltage version: 200-240 VAC, 50/60 Hz Low-voltage version: 100-120 VAC, 50/60 Hz
	Max Power[4]	High-voltage version: 1200 W @ 220 V Low-voltage version: 1000 W @ 110 V
	Steady-State Power	High-voltage version: PLA (25°C): 210 W @ 220 V Low-voltage version: PLA (25°C): 210 W @ 110 V
	Low Power Mode[5]	950 W
Environmental Requirements	Operating Temperature	10 °C - 30 °C

Notes

1. The printer comes standard with 5 PrintTools and supports switching between up to 7 Tools. You can purchase additional PrintTools or CraftTools as needed.
2. For Bambu Lab filament, the initial weight can be read automatically through RFID or entered manually. For third-party filament, enter the initial weight manually.
3. The printer's voltage specifications vary by sales region. Before use, please check the label next to the power socket on the printer to ensure the supplied voltage matches the indicated voltage.
4. To quickly heat the heatbed to the required temperature, the printer will run at maximum power for about 3–5 minutes.
5. If the circuit has limited power capacity, you can enable Low Power Mode. After it is enabled, the total energy use remains unchanged, and the heatbed and chamber will heat up more slowly.

AMS 3P Specifications

Item		Specification
Body	Product Dimensions	405*505*425 mm
	Net Weight	6.6 kg
	Spool Capacity	7
Printing	Filaments Supported by the Feeding Funnel	PLA, PETG, PCTG, TPU for AMS, EVA, PE, PP, PHA, PVA, BVOH, support filament, ABS, ASA, HIPS, PC, PA, PET; Carbon/glass fiber reinforced: PLA, PETG, PA, PET, PC, ABS, ASA
	Filaments Supported by the Bypass Feed	TPU
	Filaments Supported by the external spool	PLA, PETG, PCTG, TPU, EVA, PE, PP, PHA, PVA, BVOH, support filament, ABS, ASA, HIPS, PC, PA, PET; Carbon/glass fiber reinforced: PLA, PETG, PA, PET, PC, ABS, ASA, PPA
	Supported Filament Diameter	1.75 mm, 2.85 mm (Bypass feed only)
	Supported Spool Dimension	Width: 50 mm - 68 mm Diameter: 197 mm - 202 mm
	RFID Identification	Supported

Drying (Optional)	Max Drying Temperature	75 °C
	Drying Capacity	2
	Active Moisture Discharge	Supported
	Sealed Storage	Supported
	Temperature and Humidity Detection and Maintenance	Supported. Real-time temperature and humidity can be displayed on the screen, Bambu Studio, and Bambu Handy.
	Voltage	100-240 VAC, 50/60 Hz
	Max Power	65 W
	Steady-State Power	52 W